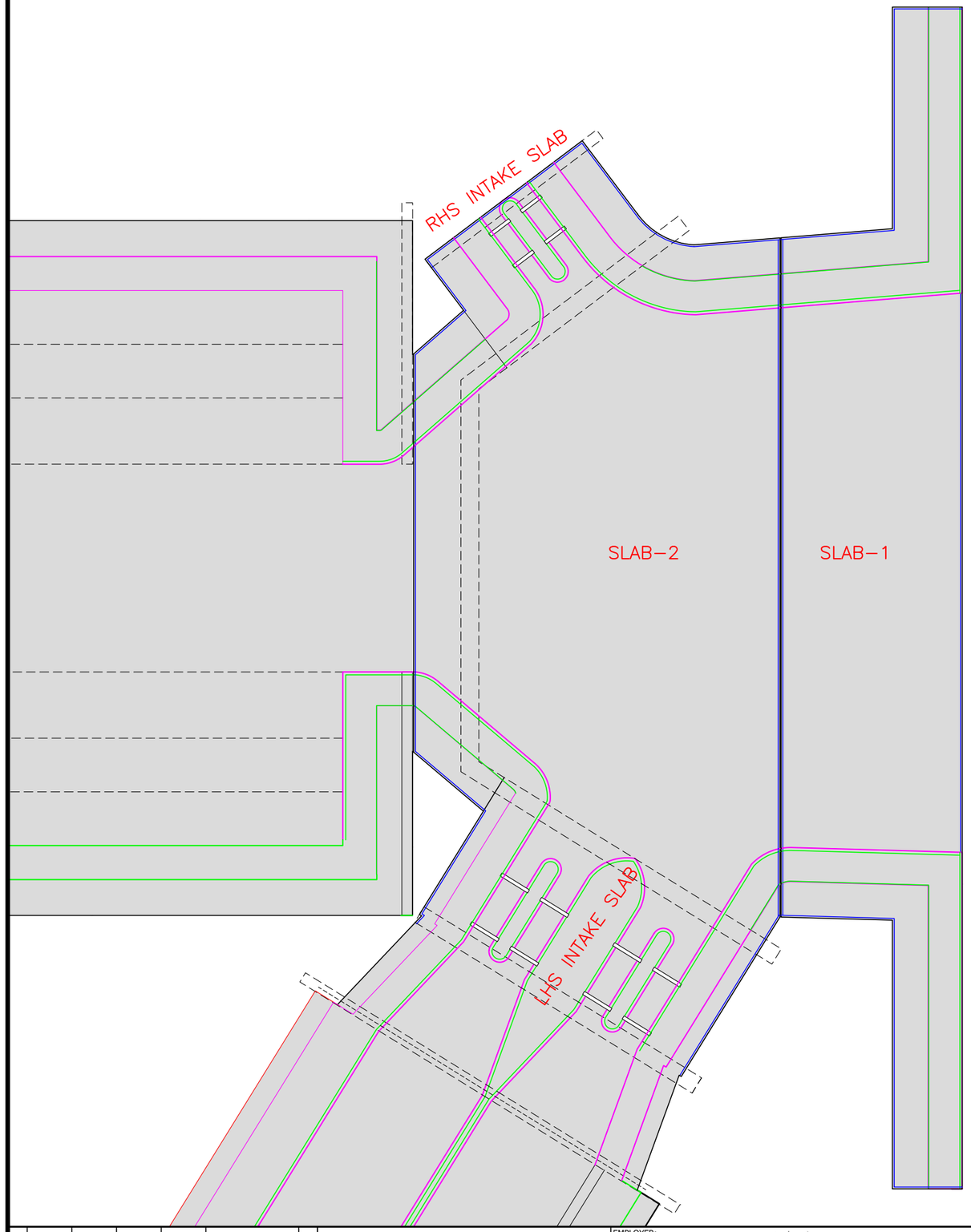

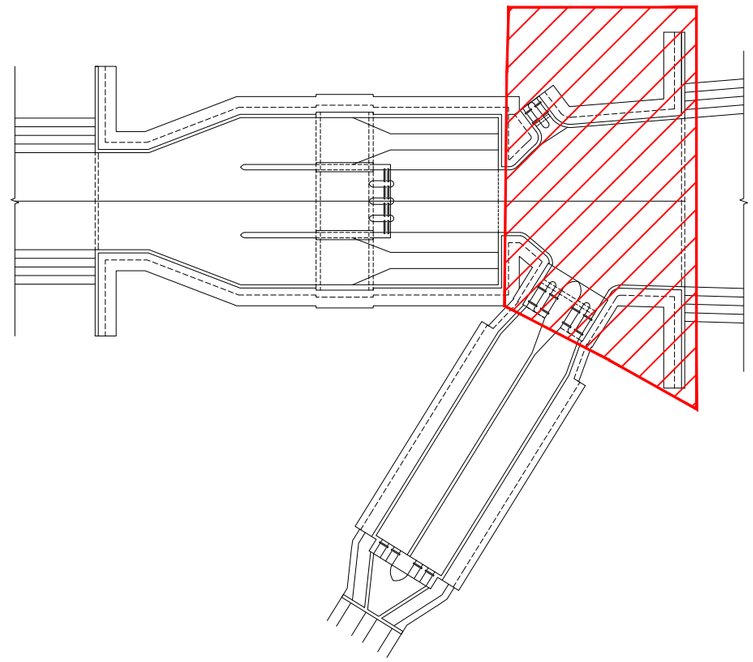

LEGEND:

- SLAB EDGE
- WALL EDGE
- CONCRETE COVER LINE
- STARTER BAR EDGE

REBAR SETTING OUT PLAN

REV	ESTABLISHED	CHECKED	APPROVED	DATE	DESCRIPTION	STAT.
0	ACCL	ACCL	ACCL	NOV-25		

GOVERNMENT OF UGANDA

CONSTRUCTION OF SIPI IRRIGATION SCHEME IN BULAMBULI DISTRICT

EMPLOYER:

MINISTRY OF WATER AND ENVIRONMENT
Plot 3 - 7 Kabalega Crescent Road, Luzira, Box 20026 Kampala
Tel : +256 417 889 400, Email: mwe@mwe.go.ug
Website: www.mwe.go.ug

CONSULTING ENGINEER:

ACE CONSULTING ENGINEERS MOHARRAM.BAKHOUM
5, El-Gomhouria El-Mothahida Square, Dokki, Giza, Egypt
P.O. Box 62, Dokki

In Joint Venture With

BEC Engineers Ltd, P.O. Box 24817, Kampala, Uganda.

CONTRACTOR:

AMBITIOUS CONSTRUCTION COMPANY LTD.
BUILDING AND CIVIL ENGINEERING CONTRACTORS

AMBITIOUS CONSTRUCTION COMPANY LTD.

DRAWING TITLE:

HEADWORKS STRUCTURE

REBAR SETTING OUT

SHOP DRAWING

PROJECT DOCUMENT NUMBER:

company	phase	zone	document	number
ACCL	SD	HW		

SCALE : AS SHOWN

FILE NAME: REBAR SETTING OUT